Assembly instruction

UNWIND

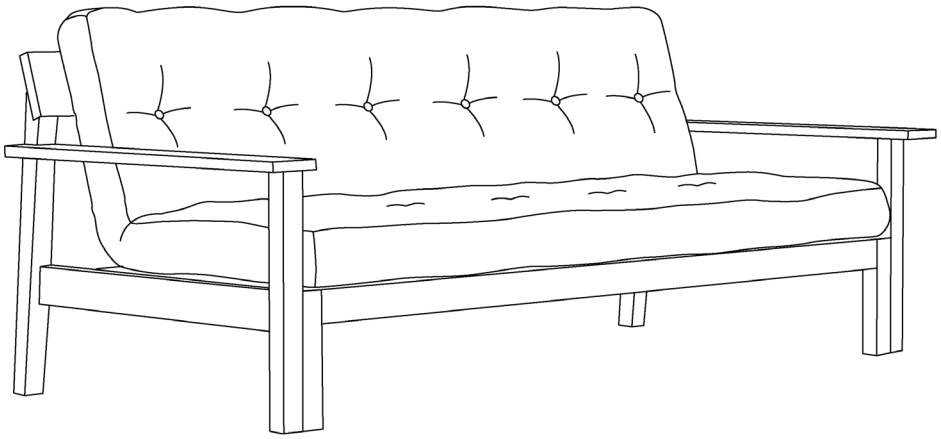

karup

DESIGN

karupdesign.com

Thank you for your purchase

Tak for din bestilling
Herzlichen Dank für Ihren Einkauf
Vă mulțumim pentru comandă
Merci de votre achat
Bedankt voor uw aankoop
Děkujeme vám za váš nákup
Grazie per il tuo acquisto
Gracias por su compra
Kiitos ostoksestasi
Takk for bestillingen din
Dziękujemy za zakup
Спасибо за покупку
Tack för ditt köp
ご購入ありがとうございます。
구매해 주셔서 감사합니다

FITTINGS

A X 86

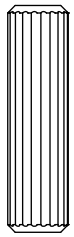

ø8 x
30 mm

B X 63

ø5 x
38 mm

C X 2

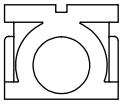

M10 x ø15
12,5 mm

D X 2

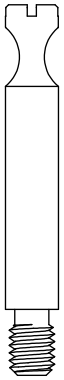

M6 x 8 x
ø7 x
48,5 mm

E X 2

M10 x
7,5 mm

F X 6

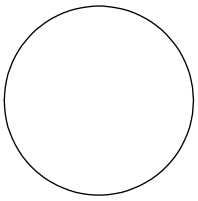

ø25 x
40 mm

G X 2

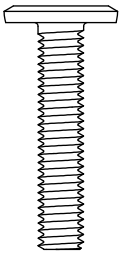

M6 x
30 mm

H X 14

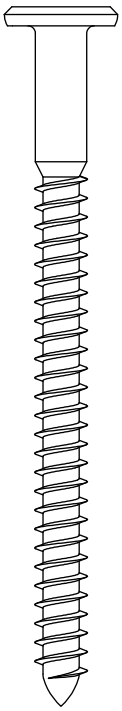

ø6,3 x
90 mm

I X 6

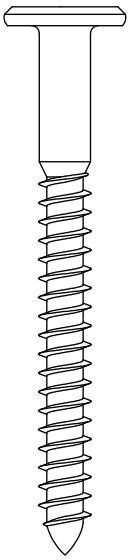

ø,36 x
70 mm

J X 1

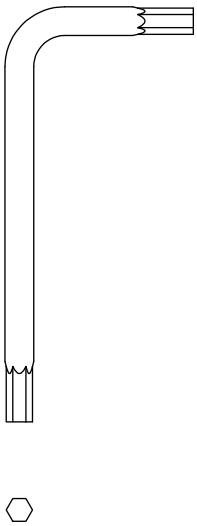

3 mm

K X 1

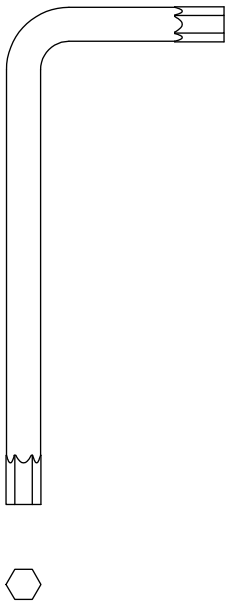

4 mm

L X 1

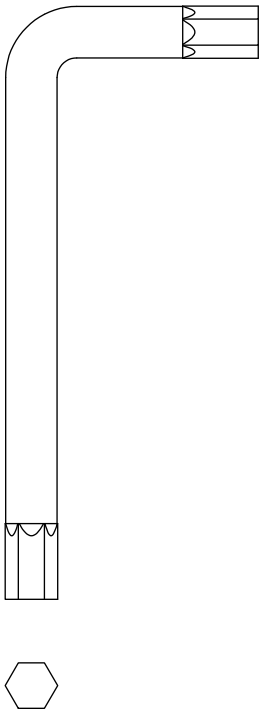

6 mm

M X 4

M6 x ø10
13 mm

O X 8

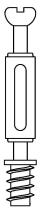

P X 8

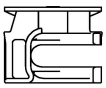

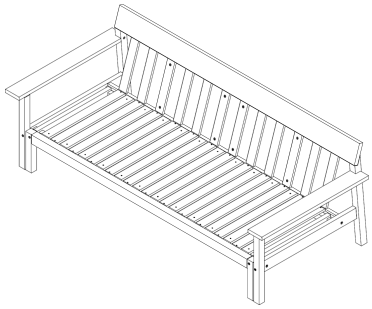

1 x 1	1 x 5	1 x 9	2 x 13	1 x 17	1 x 21
12 x 2	1 x 6	1 x 10	1 x 14	1 x 18	4 x 22
23 x 3	1 x 7	1 x 11	2 x 15	1 x 19	
1 x 4	1 x 8	1 x 12	1 x 16	1 x 20	

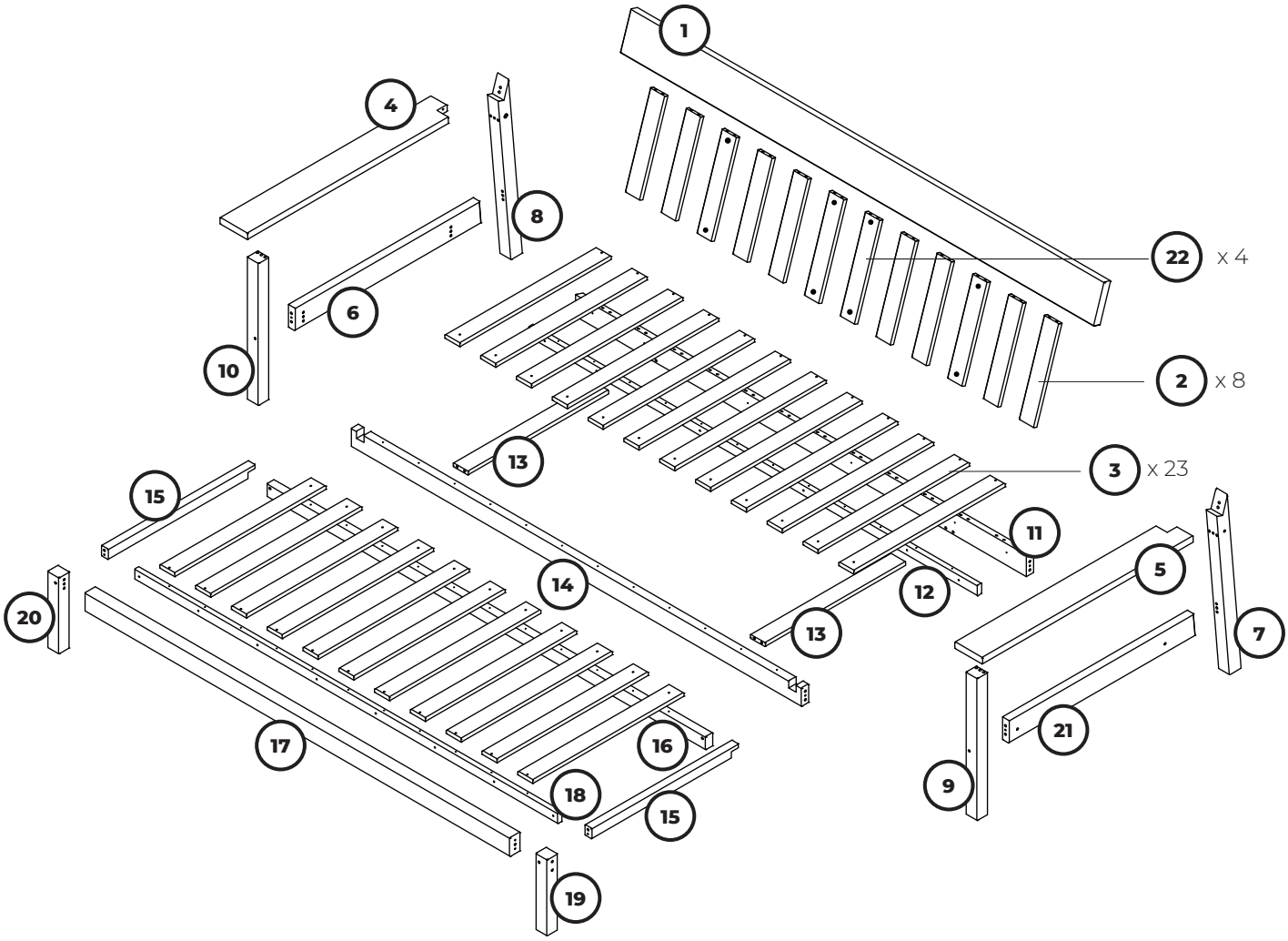

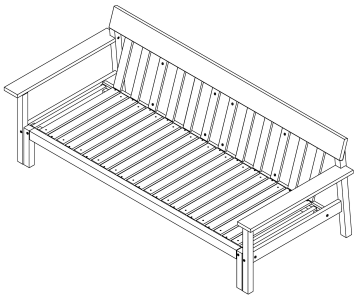

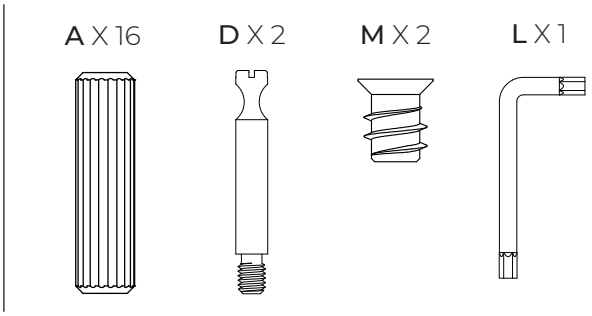
A X 16
D X 2
M X 2
L X 1

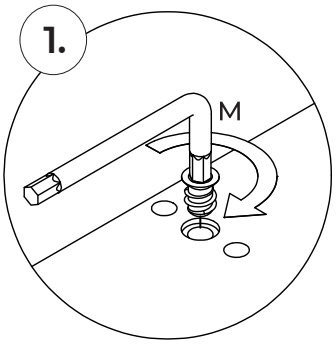
1.
M

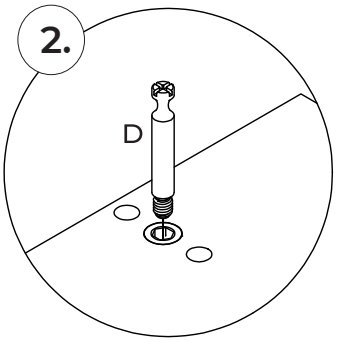
2.
D

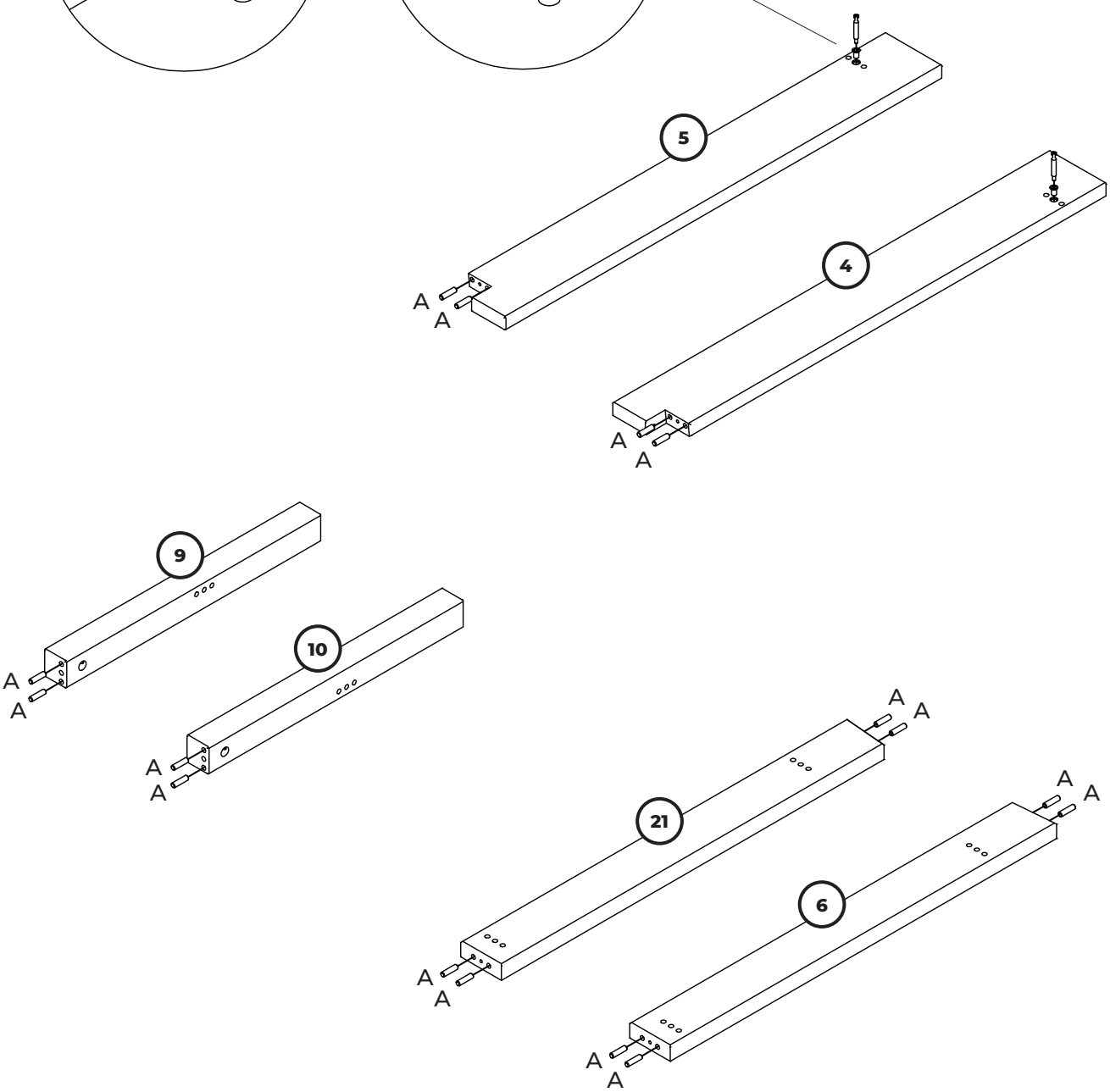
5
A
A
4
A
A
9
A
A
10
A
A
21
A
A
A
A
6
A
A

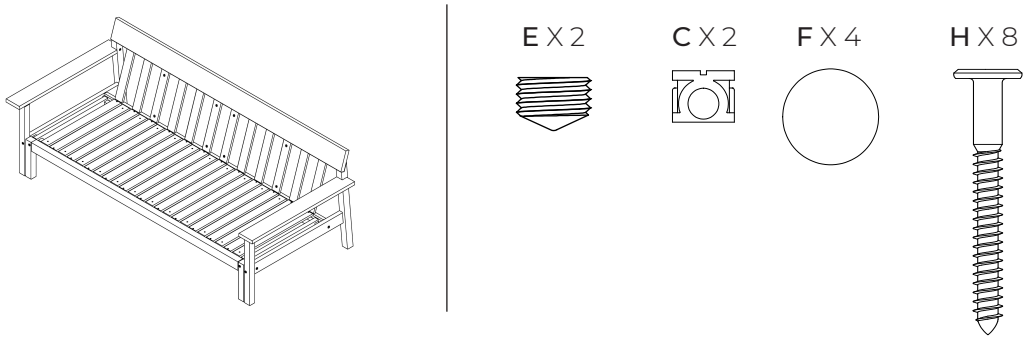
E X 2
C X 2
F X 4
H X 8

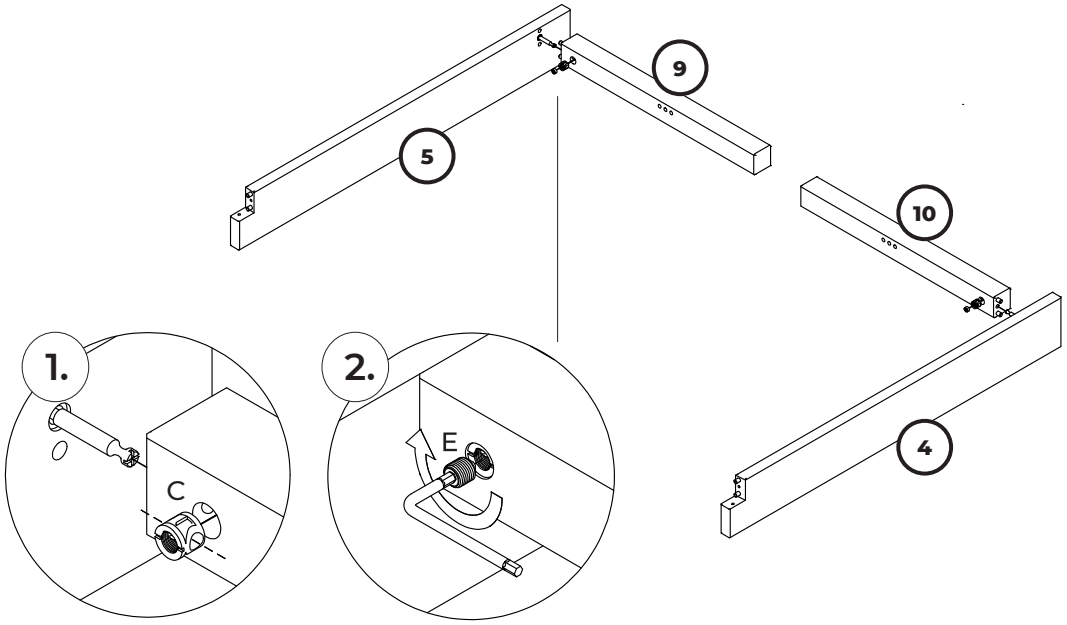
9
5
10
1.
2.
C
E
4

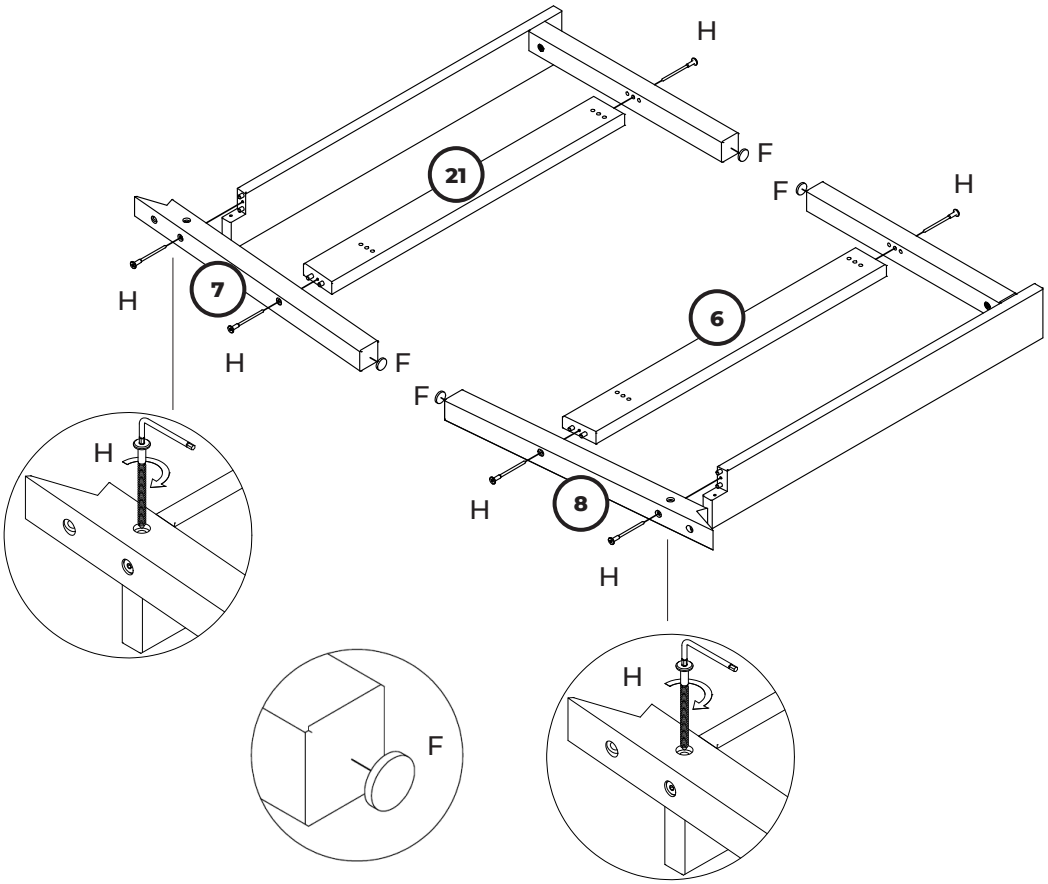
H
F
21
F
H
7
H
H
F
6
F
H
8
H
H
H
F

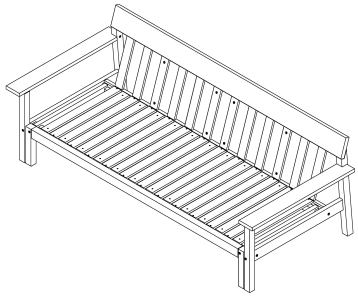

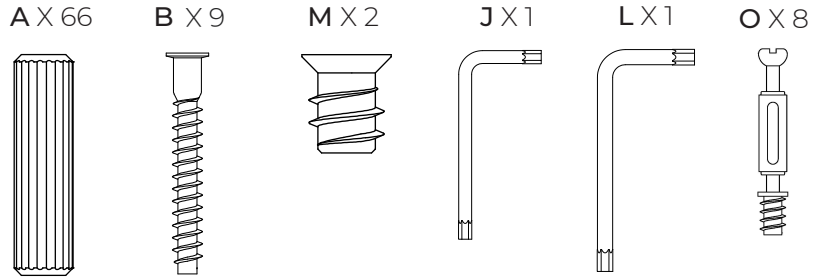
A X 66
B X 9
M X 2
J X 1
L X 1
O X 8

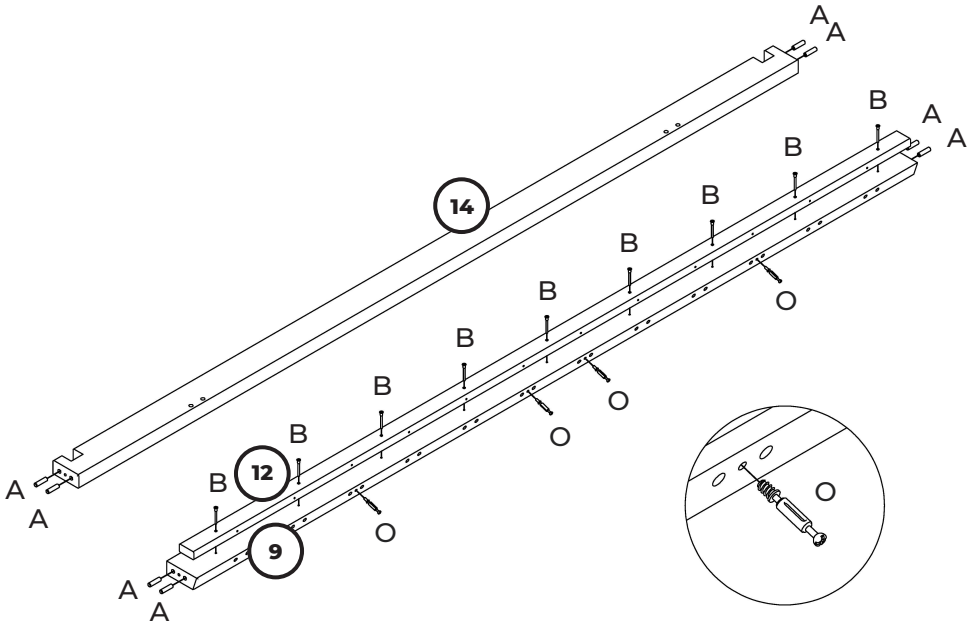
14
12
9
A
B
O

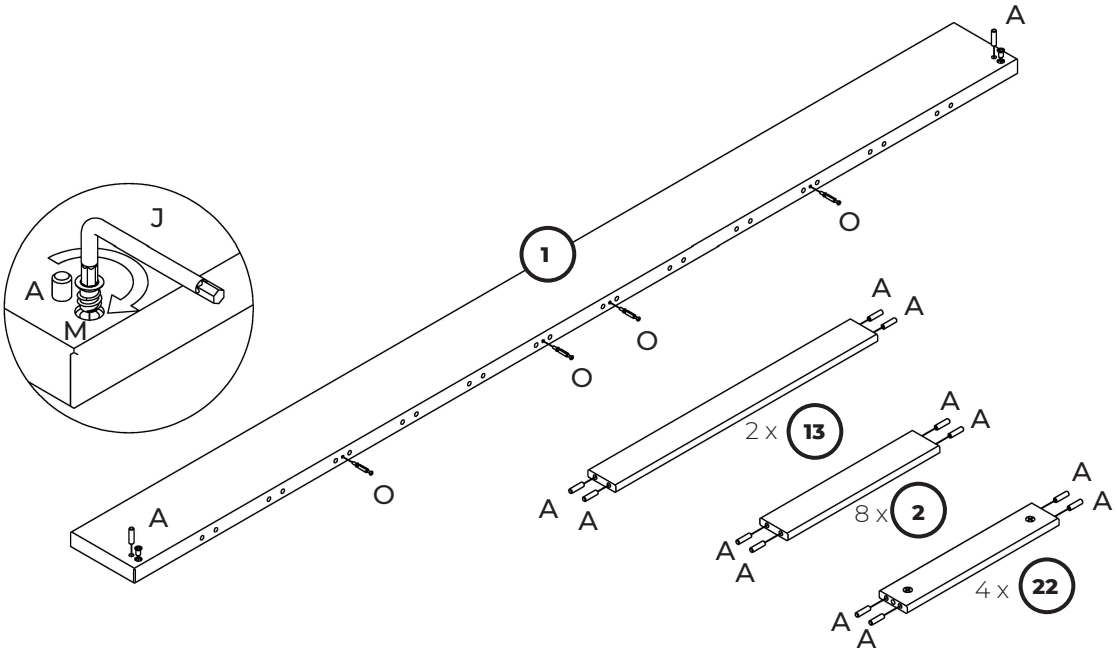
1
2 x 13
8 x 2
4 x 22
A
O
J
M

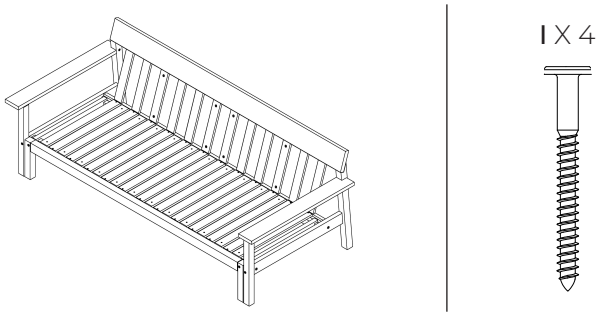

I X 4

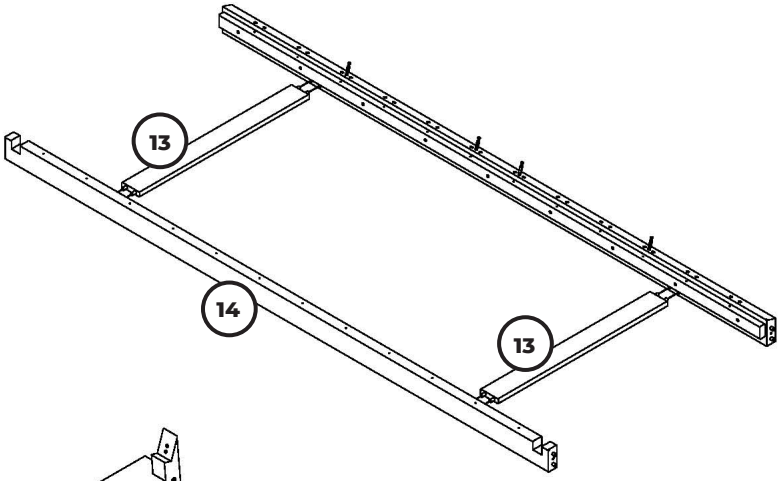

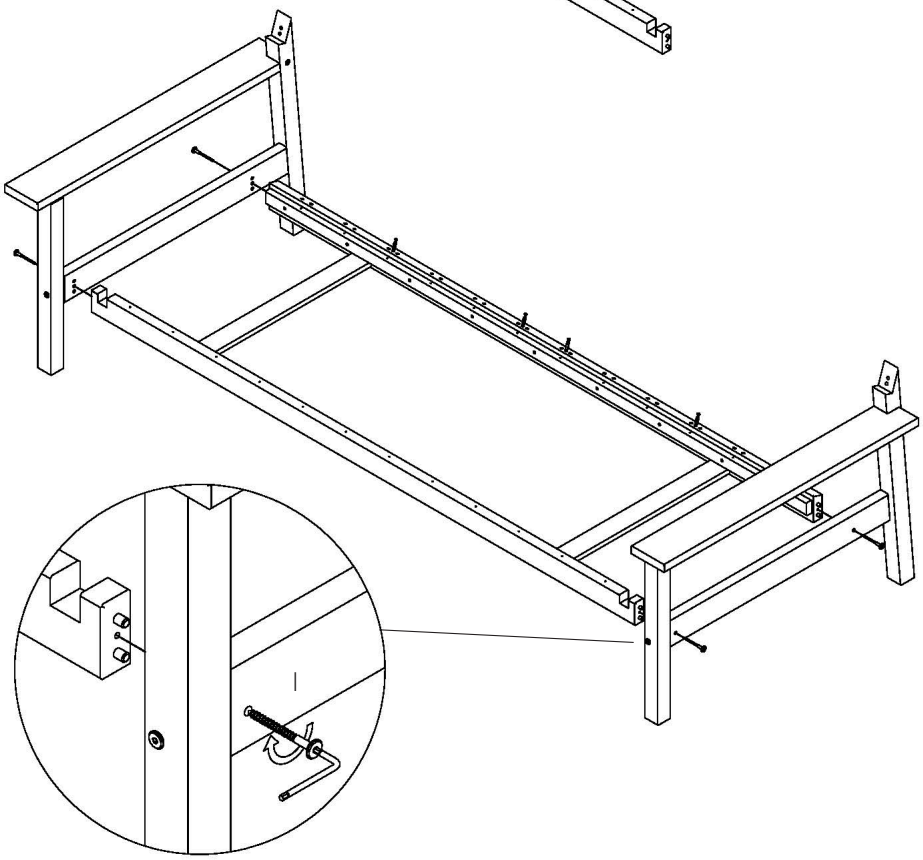

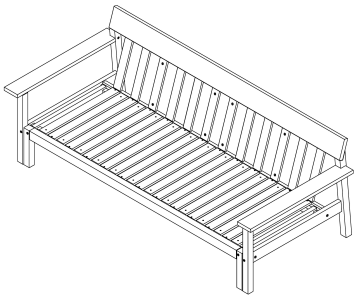

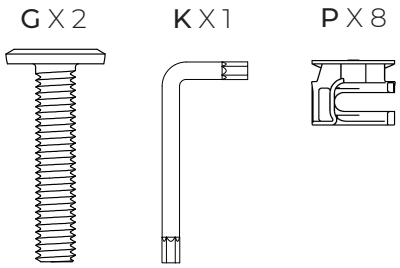
G X 2
K X 1
P X 8

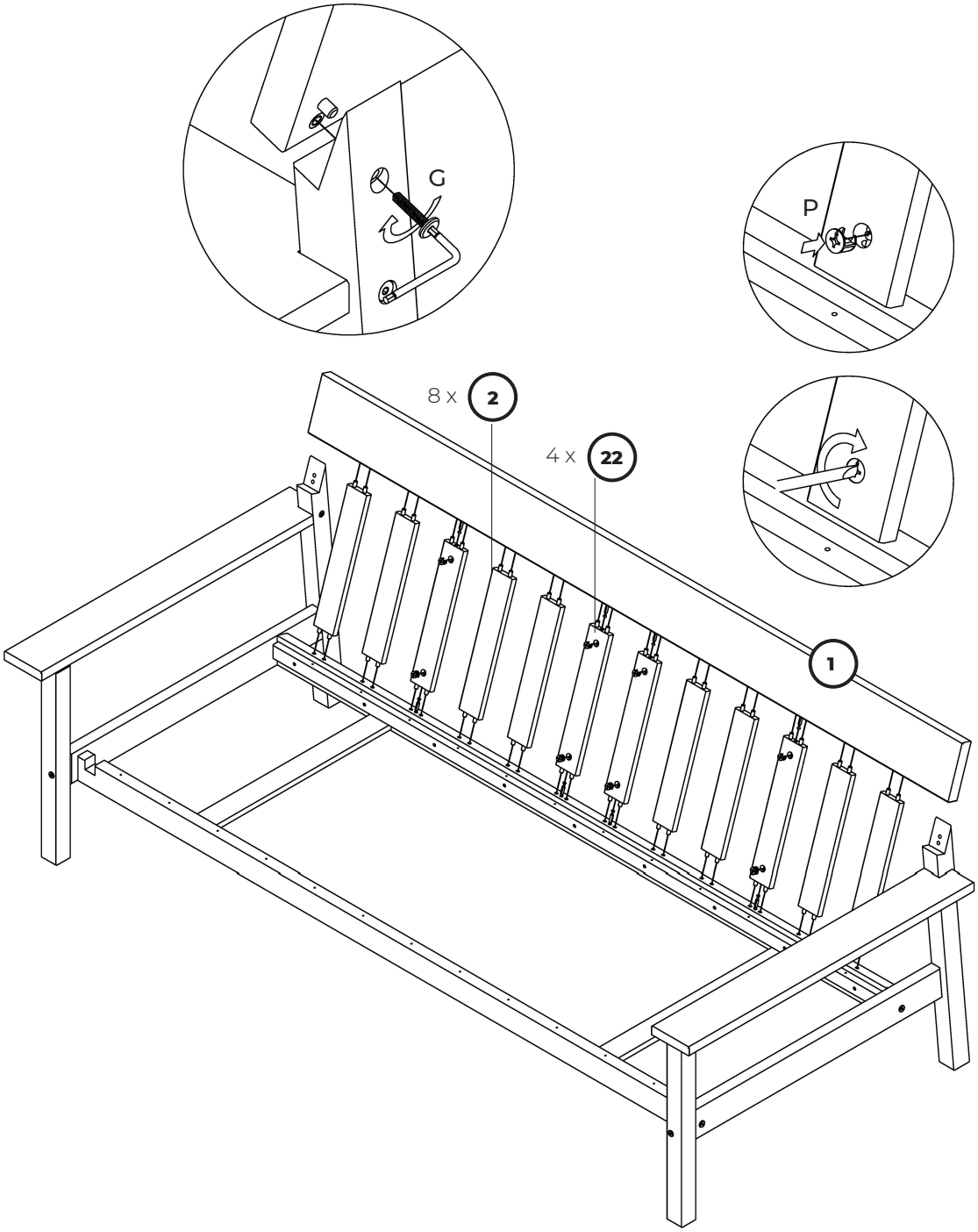
G
P
8 x 2
4 x 22
1

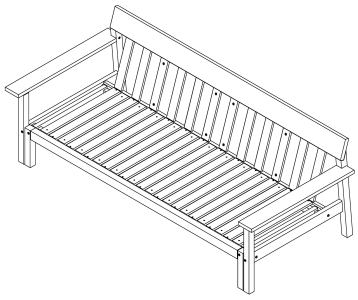

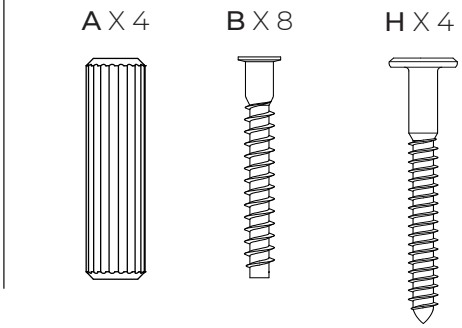
A X 4
B X 8
H X 4

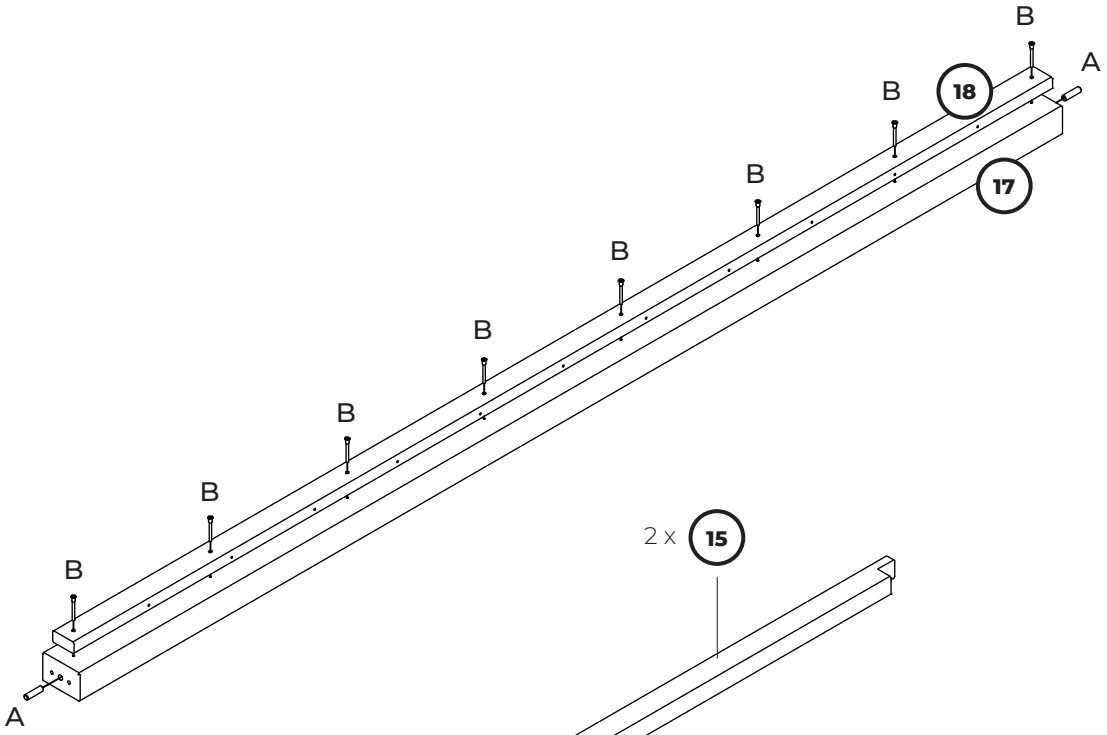
B
A
18
17

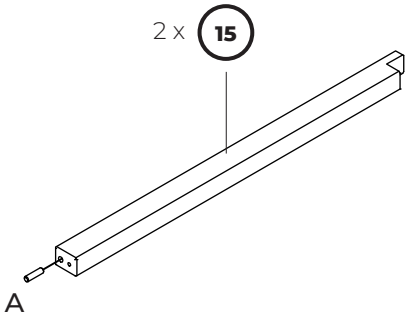
2 x
15
A

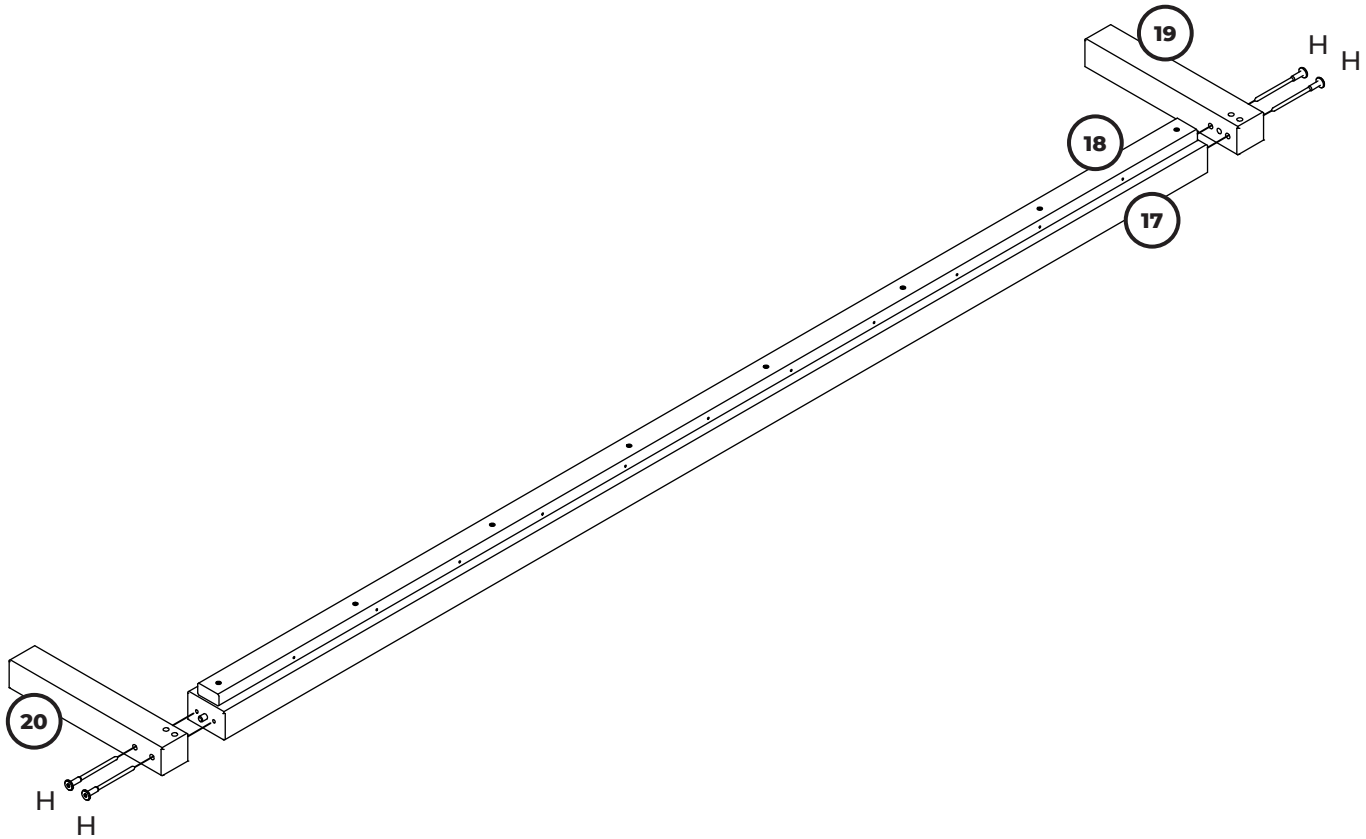
19
H
H
18
17
20
H
H

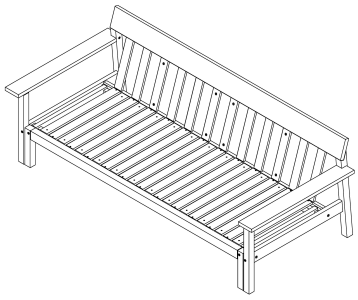

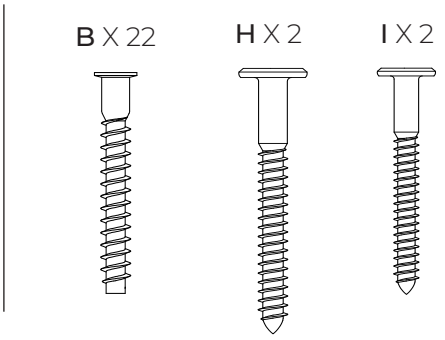
B X 22
H X 2
I X 2

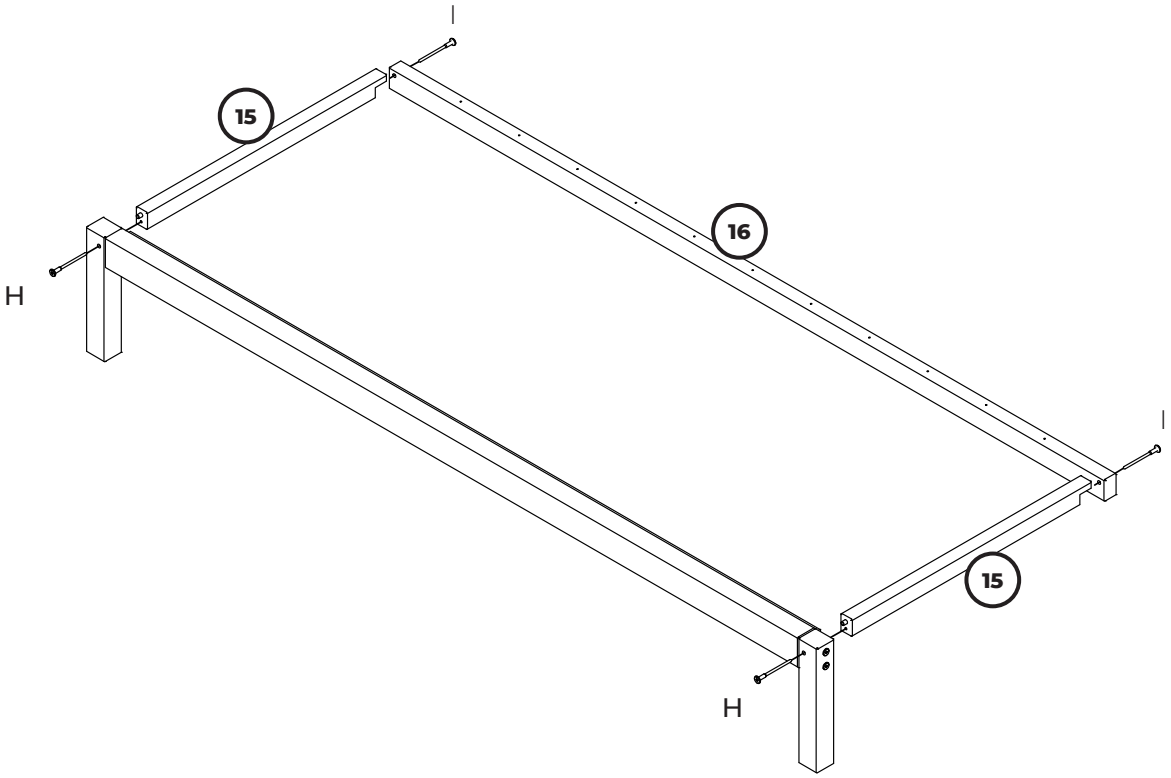
I
15
16
H
I
15
H

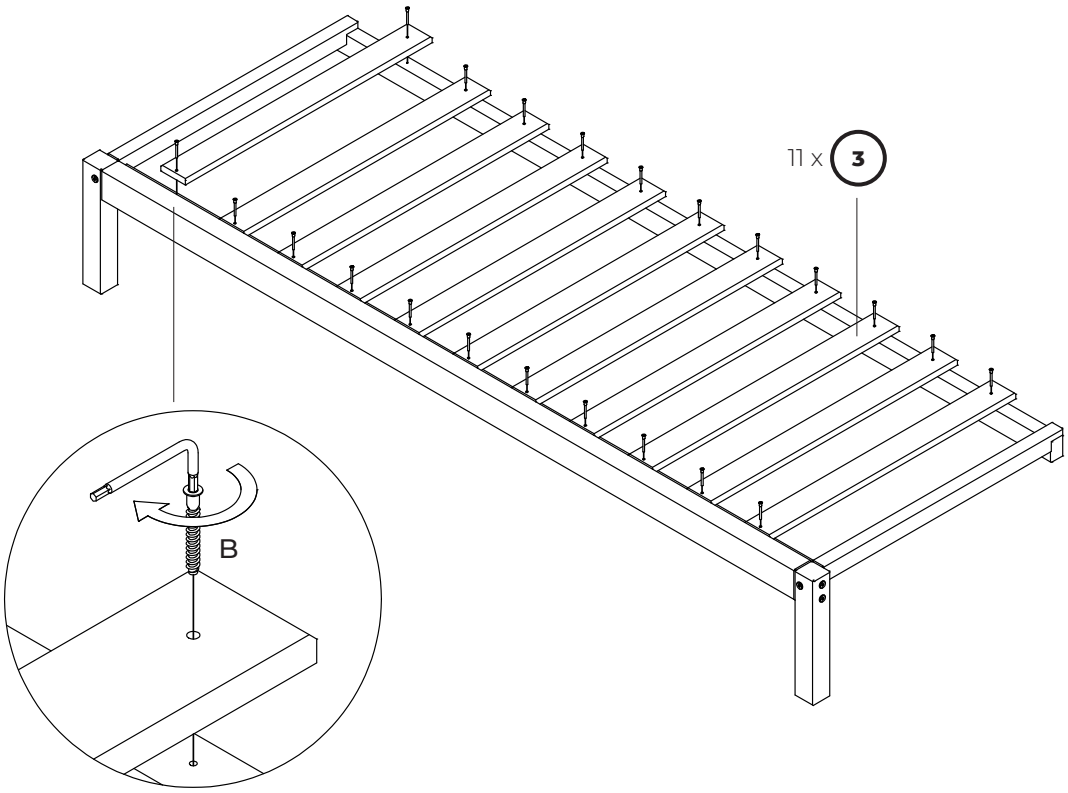
11 x 3
B

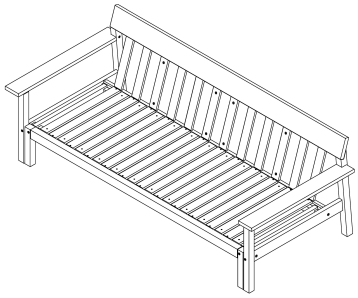

B X 24

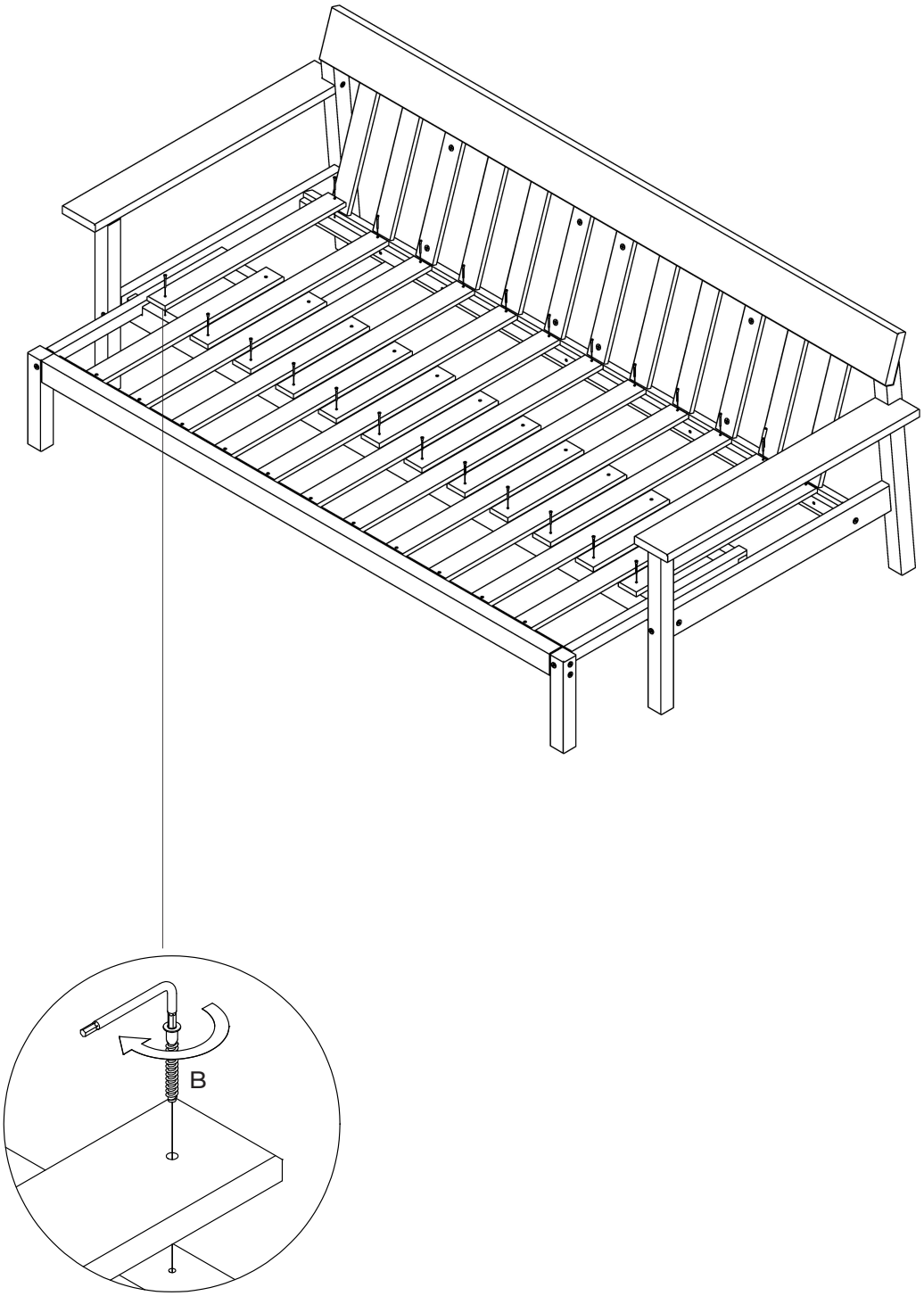

karup

DESIGN

Share your moments **#karupdesign #karuplifestyle**

For product care visit **karupdesign.com/care**